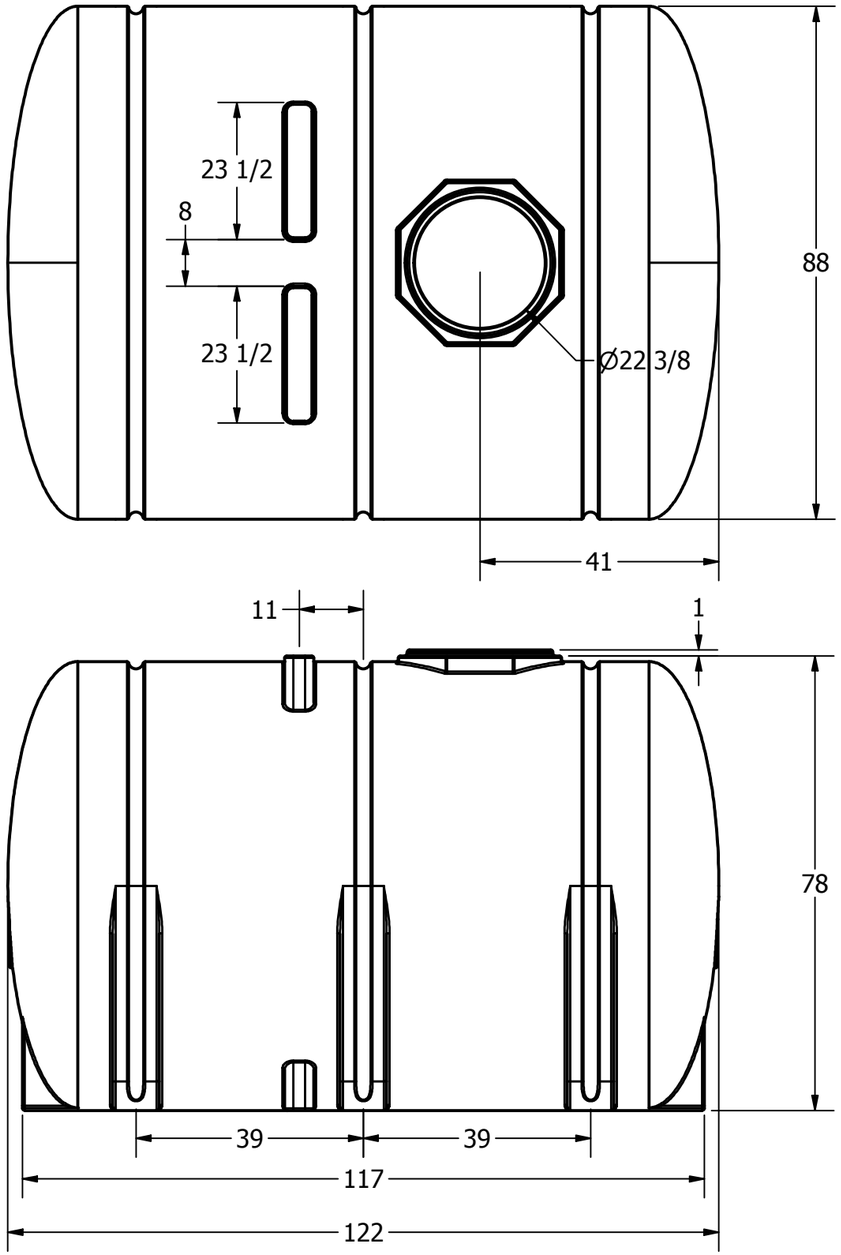

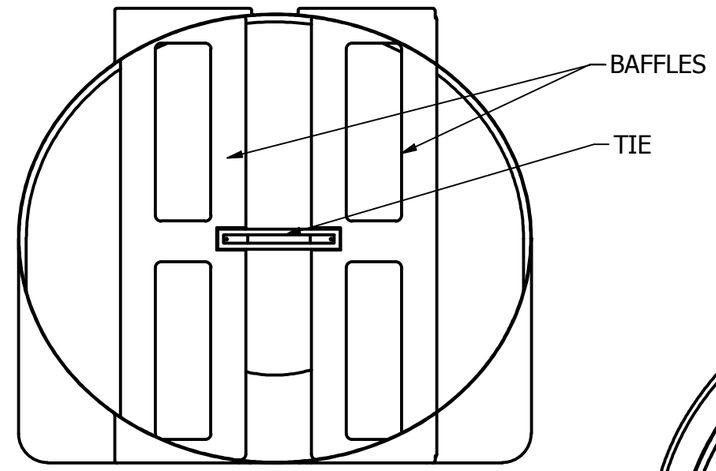

SECTION

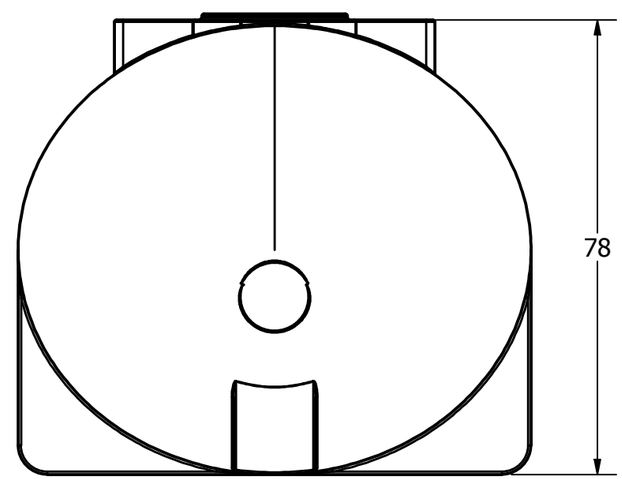

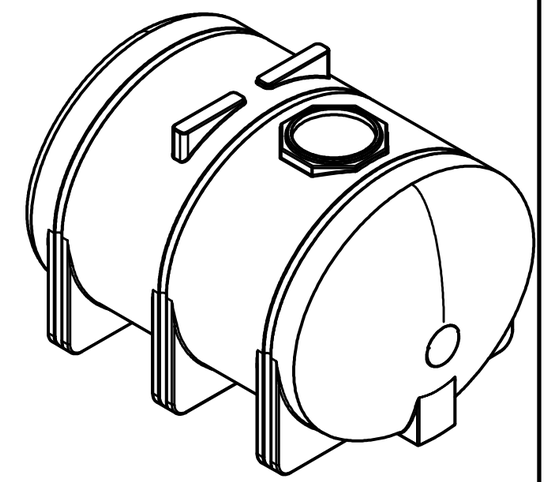

DRAWN Liv Oltean	5/14/2018	NORWESCO, INC. SAINT BONIFACIUS, MN
CHECKED		TITLE
QA		2650 GALLON ELLIPTICAL LEG TANK
MFG		
APPROVED		SIZE B / DWG NO / REV
		SCALE: 1/16 / SHEET 1 OF 1